Exploded View

Single Stage

Model No:
HRB - 100.200.300.400.500.600.700
HRB - 101.201.301.401

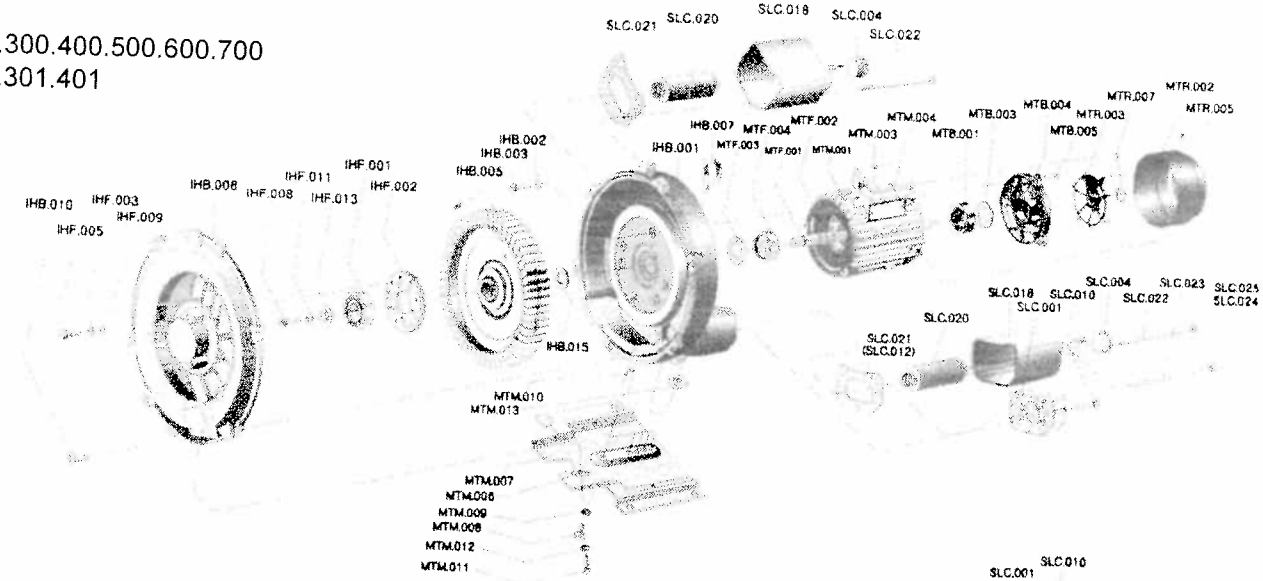

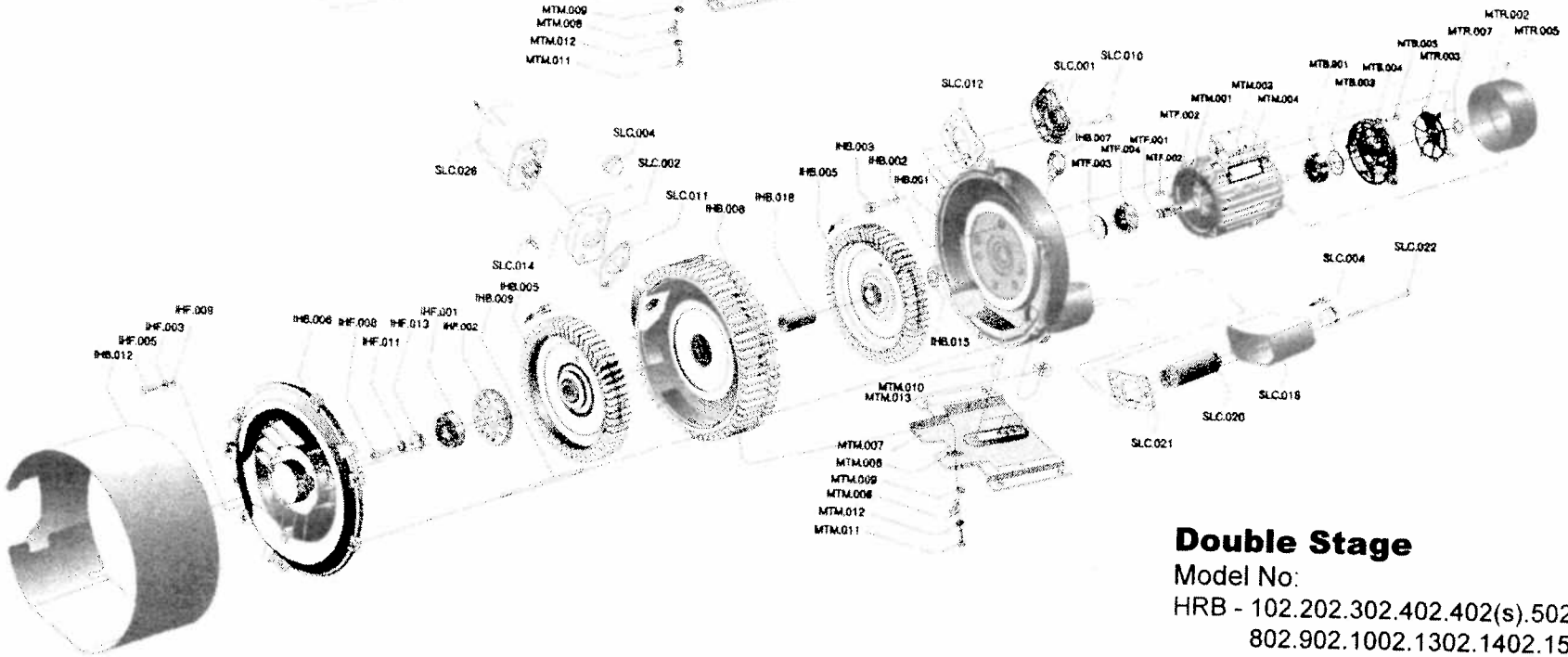

Double Stage

Model No:
HRB - 102.202.302.402.402(s).502.602.702.
802.902.1002.1302.1402.1502.1602
HRB - 102-1.202-1.302-1.402-1.402(s)-1